Access Point WiFi 6 Mesh

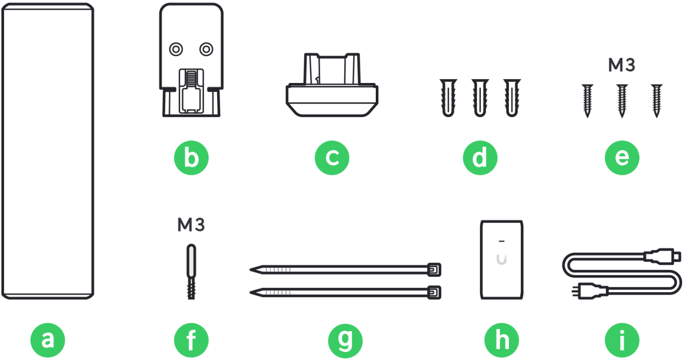
M3
b
c
d
e
M3
a
f
g
h
i

1

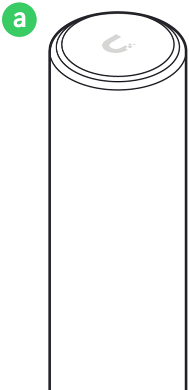

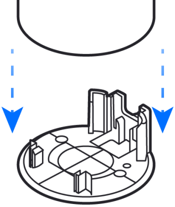

2

A

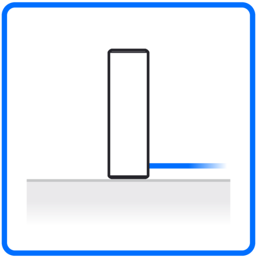

a

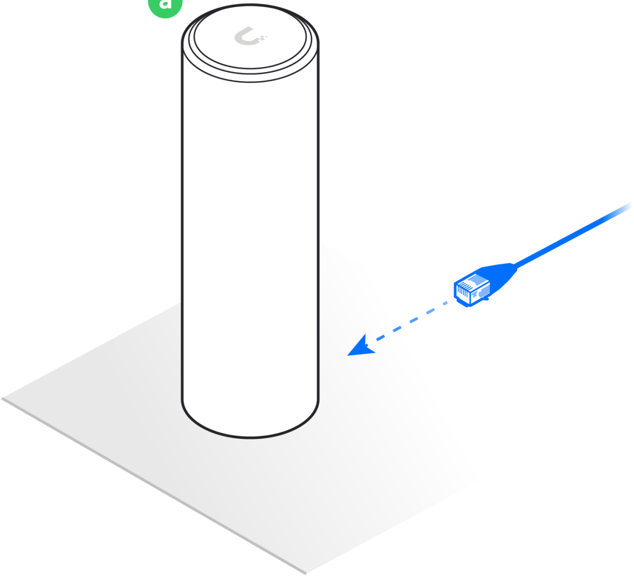

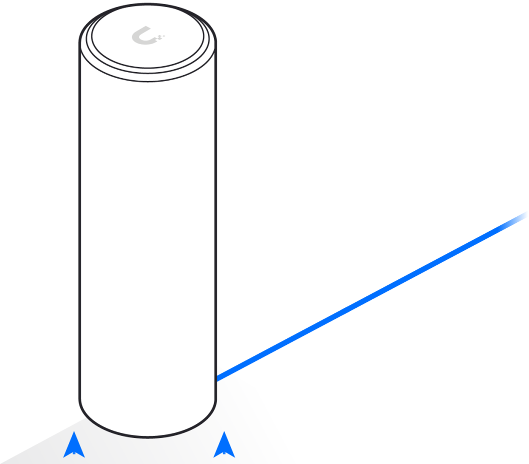

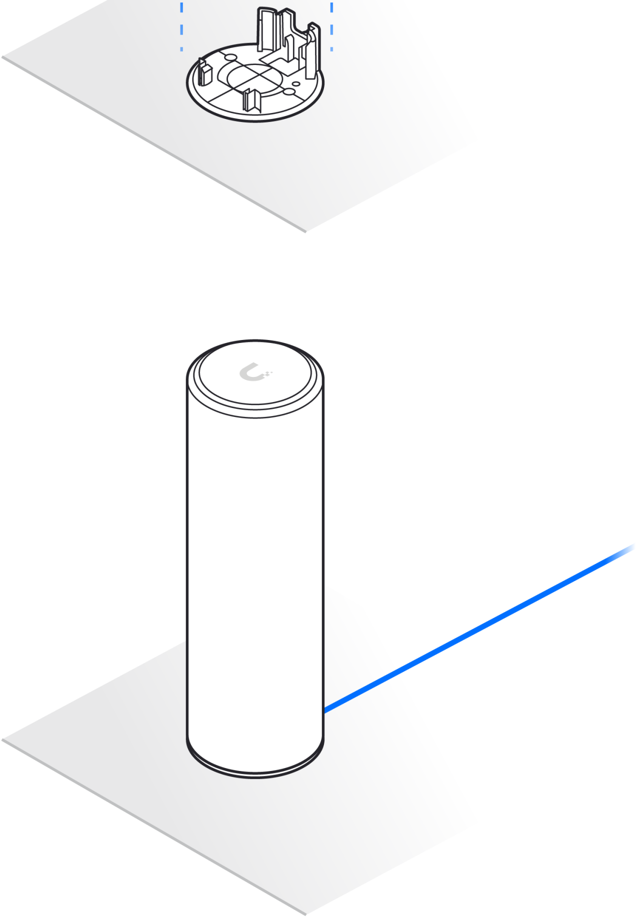

B

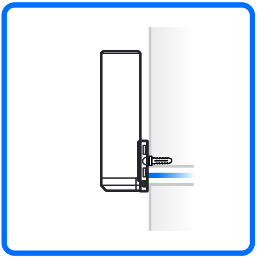

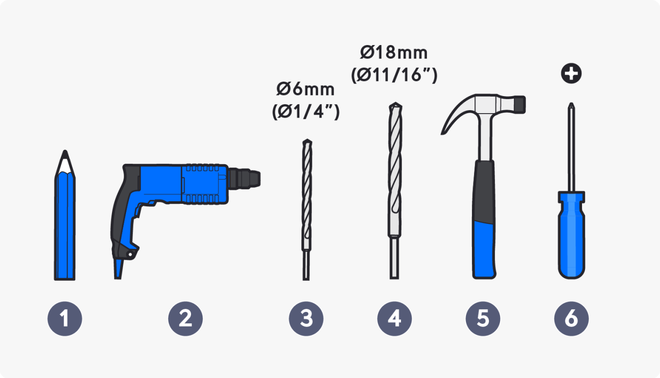
Ø6mm
(Ø1/4”)
Ø18mm
(Ø11/16”)
1
2
3
4
5
6

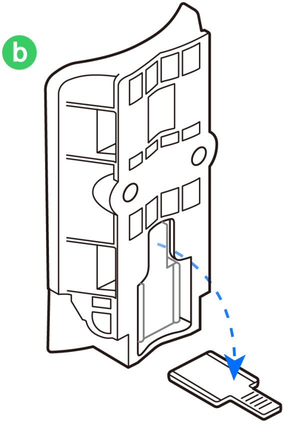

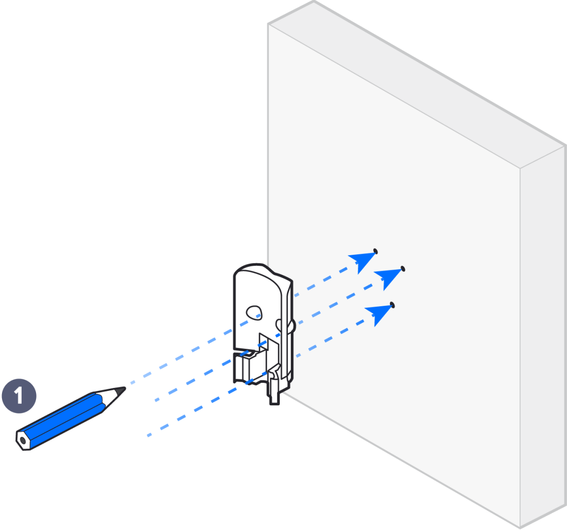

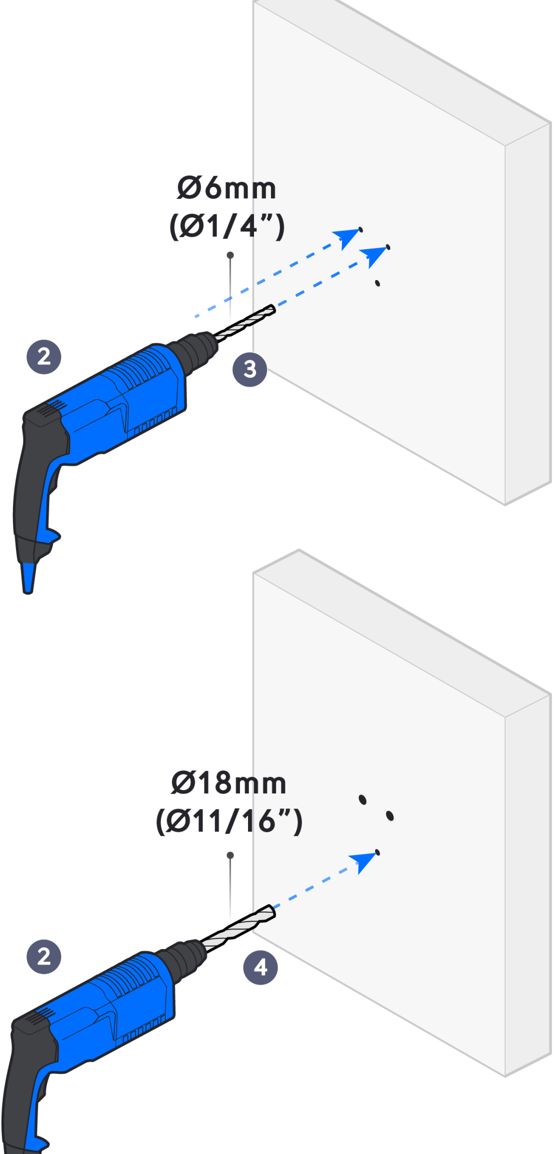
Ø6mm
(Ø1/4”)
2
3
Ø18mm
(Ø11/16”)
2
4

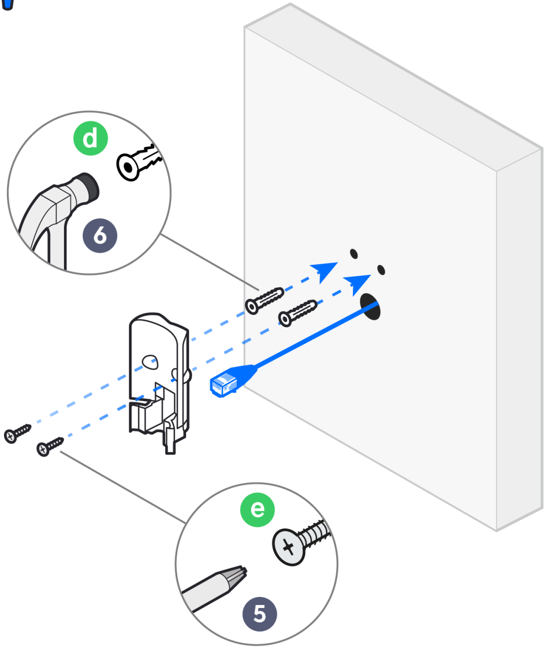

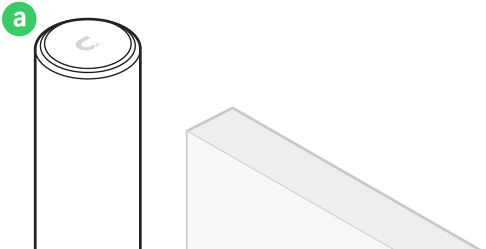

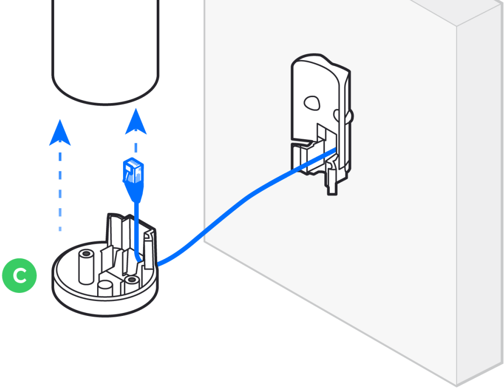

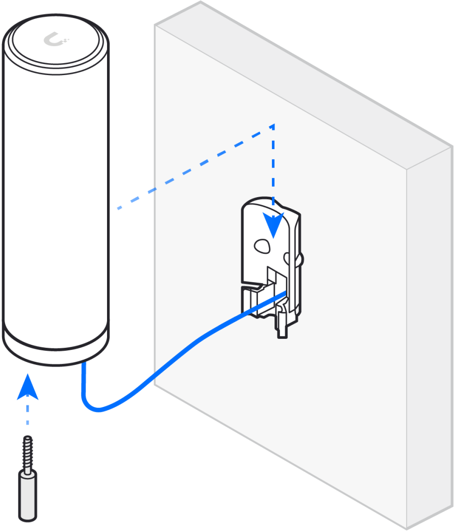

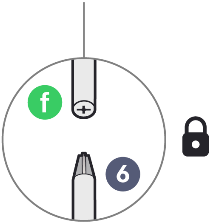

C

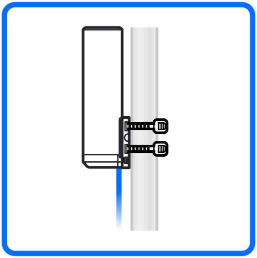

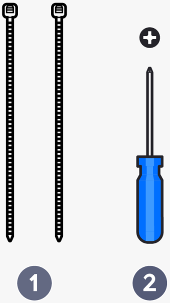

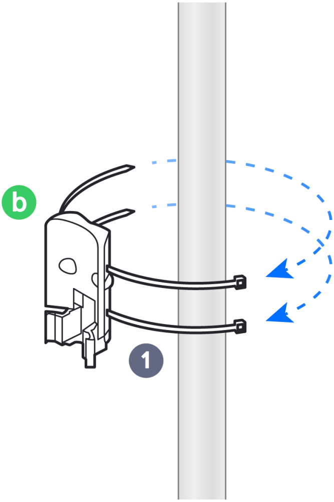

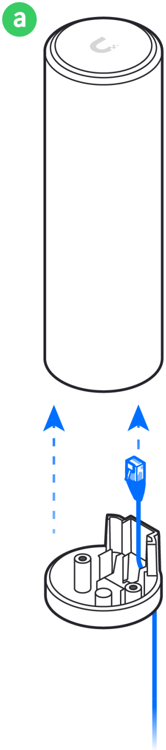

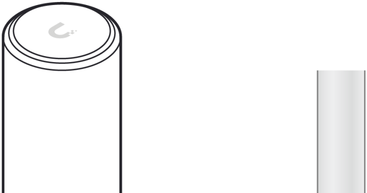

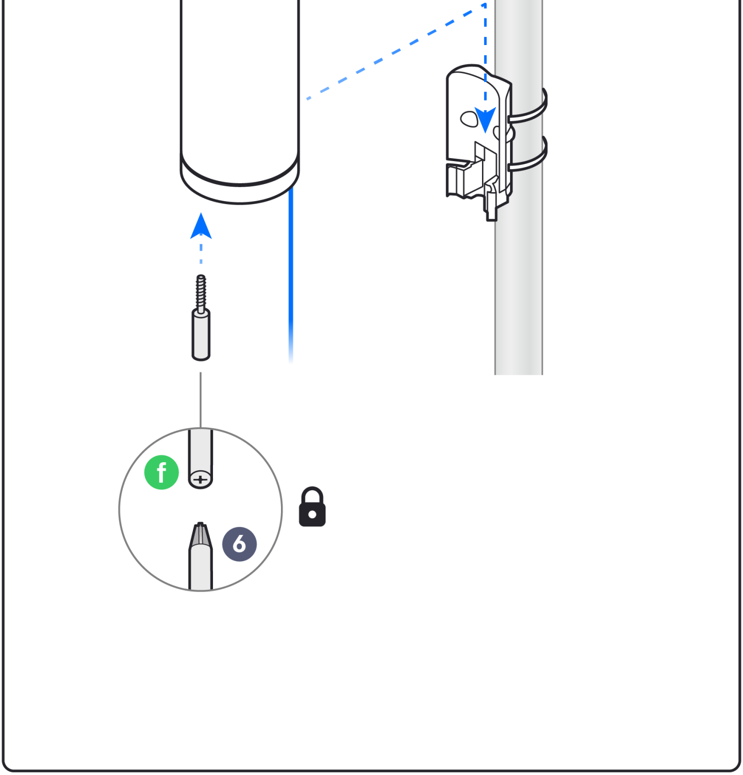

3

Internet

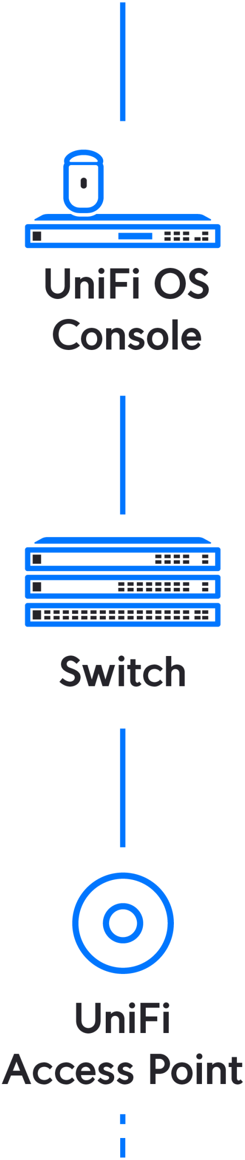
UniFi OS Console
Switch
UniFi Access Point

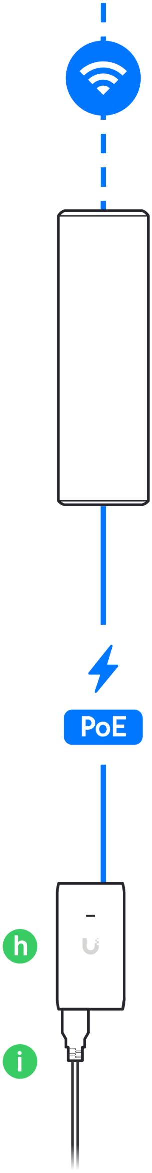

4

Download on the App Store

GET IT ON Google Play

🔗

🔗

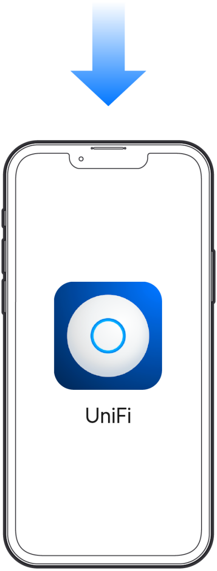

If you need further assistance, visit our Help Center or contact Ubiquiti Support.

©2020-2021 Ubiquiti Inc. All rights reserved. Ubiquiti, Ubiquiti Networks, the Ubiquiti U logo, UniFi, and UniFi Network are trademarks or registered trademarks of Ubiquiti Inc. in the United States and in other countries. All other trademarks are the property of their respective owners.